1T14C-7 Firestone

AIRSTROKE® ACTUATORS AIRMOUNT® ISOLATORS

	Description	Assembly Order No.
Style 1T14C-7 Two Ply Bellows	Blind nuts, 1/4 NPT	WO1-358-5712
	Blind nuts, 3/4 NPT	WO1-358-5708
Assembly weight ..... 7.0 lbs.		

Style 1T28C-7 High Strength Bellows	Blind nuts, 1/4 NPT	WO1-358-5743

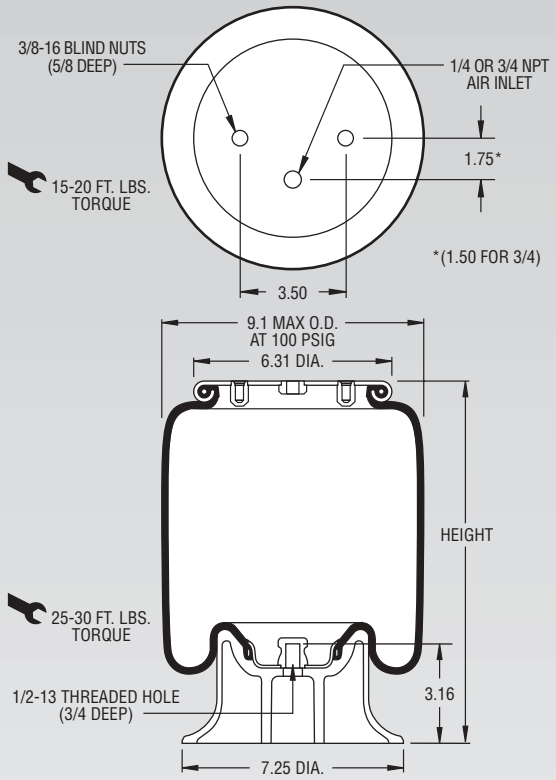

NOTE: Bellows will not compress properly with less than 10 PSIG internal pressure.

NOTE: A bead plate part is shown. This part is also available with a bead ring. Bolts are not included. See pages 8-10 for explanation.

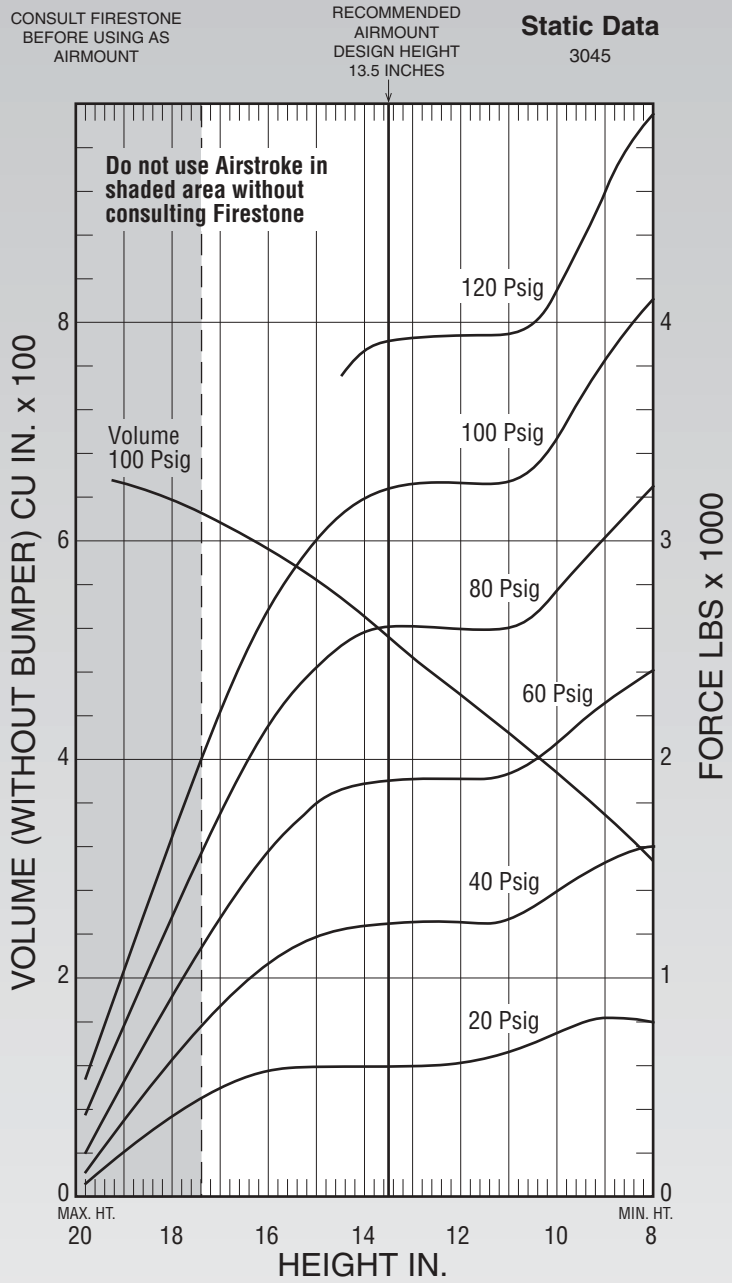

See page 12 for instructions on how to use chart.

Dynamic Characteristics at 13.5 in. Design Height (Required for Airmount isolator design only)				
Volume @ 100 PSIG = 507 in³			Natural Frequency	
Gage Pressure (PSIG)	Load (lbs.)	Spring Rate (lbs./in.)	CPM	HZ
40	1,250	166	68	1.14
60	1,910	243	67	1.12
80	2,600	305	64	1.07
100	3,240	397	66	1.10

Force Table (Use for Airstroke® actuator design)						
Assembly Height (in.)	Volume @ 100 PSIG (in³)	Pounds Force				
		@20 PSIG	@40 PSIG	@60 PSIG	@80 PSIG	@100 PSIG
17.0	615	500	890	1,310	1,790	2,260
15.0	558	600	1,210	1,820	2,460	3,070
13.0	490	600	1,250	1,920	2,610	3,260
11.0	421	660	1,280	1,930	2,610	3,270
9.0	349	820	1,540	2,270	3,040	3,850